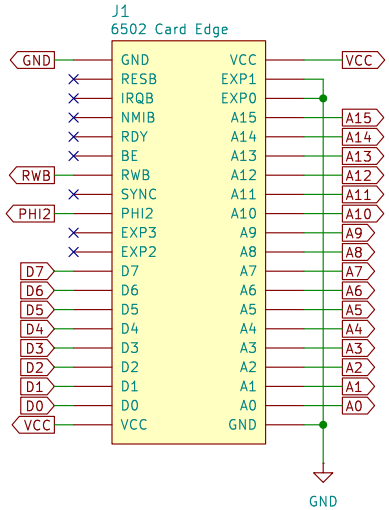

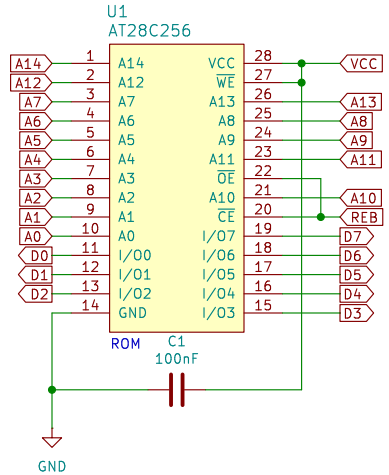

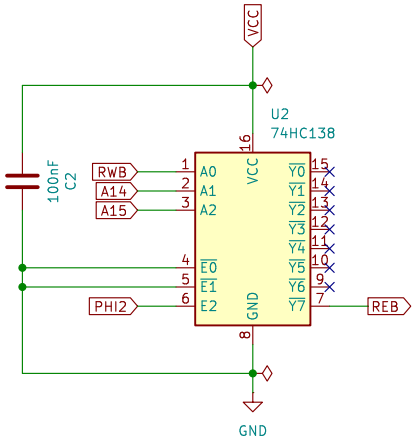

6502

A.C. Wright Design

Sheet: /
File: ROM Cart.kicad_sch

Title: 6502 ROM Cart

Size: USLetter	Date: 2025-09-17	**Rev: 1.0a**
KiCad E.D.A. 9.0.7		Id: 1/1